5G Learning report

Github : https://github.com/feng-fs355/automation/tree/main/Network

1. 5G NSA vs 5G SA
2. 5G SA architecture
3. 5G Core Network
4. 5GC opensource 1: Magma
5. 5GC opensource 2 : open5gs
6. Test Beds releated to 5G UE(UERANSIM)
7. Test Beds related to 5G UE (User equipment)
8. Test Beds related to 5G CoreNetwork (CD-Router)
9. 5G testing reference from AWS
10. Layer 2 Qos 802.1p (DSCP) test reference

1. 5G NSA vs 5G SA

NSA = Non-Standalone

-> 4G + 5G

SA = Standalone

-> 5G New Radio access only

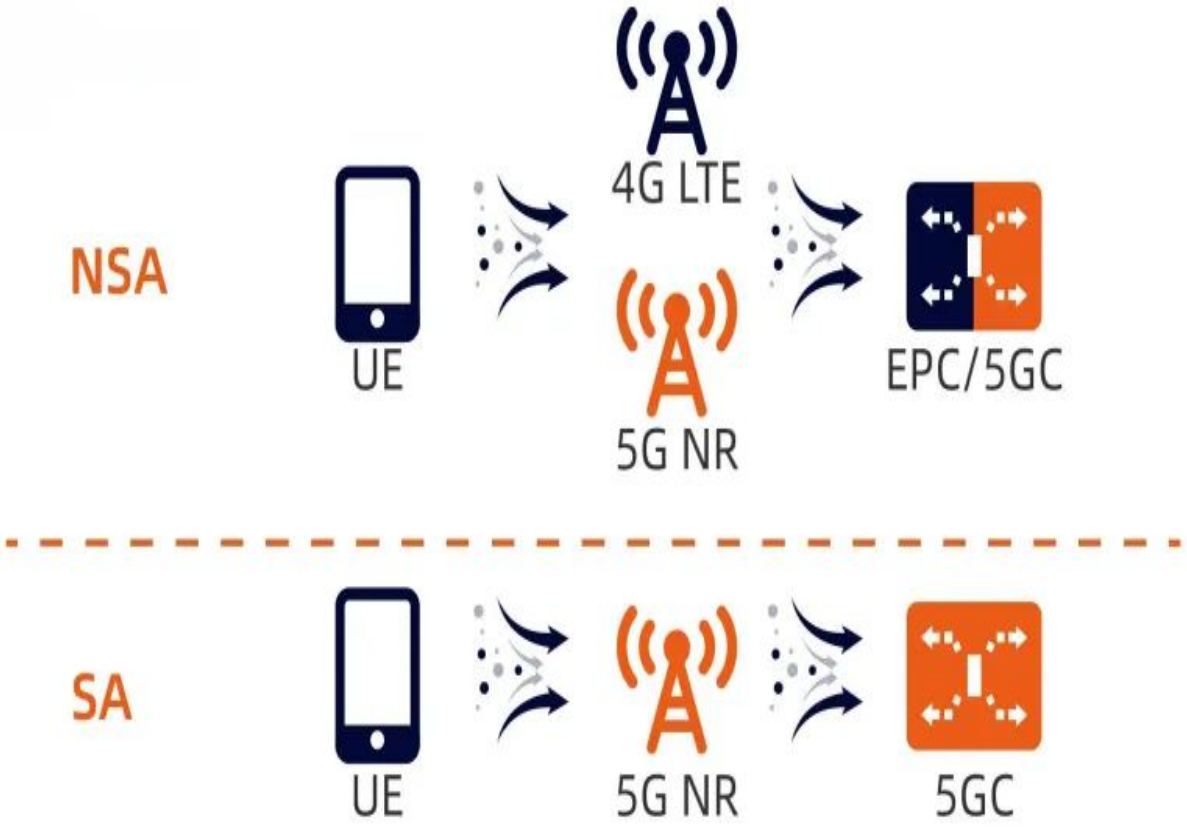

5G NSA

https://source.android.com/docs/core/connect/5g-nsa?hl=zh-tw

Devices running **Android 10** or higher can support 5G non-standalone (NSA). 5G NSA is a solution for 5G networks where the network is supported by the **existing 4G infrastructure.** On Android 10, devices can display a 5G icon on the status bar when a device connects to a 5G network.

2. 5G SA architecture

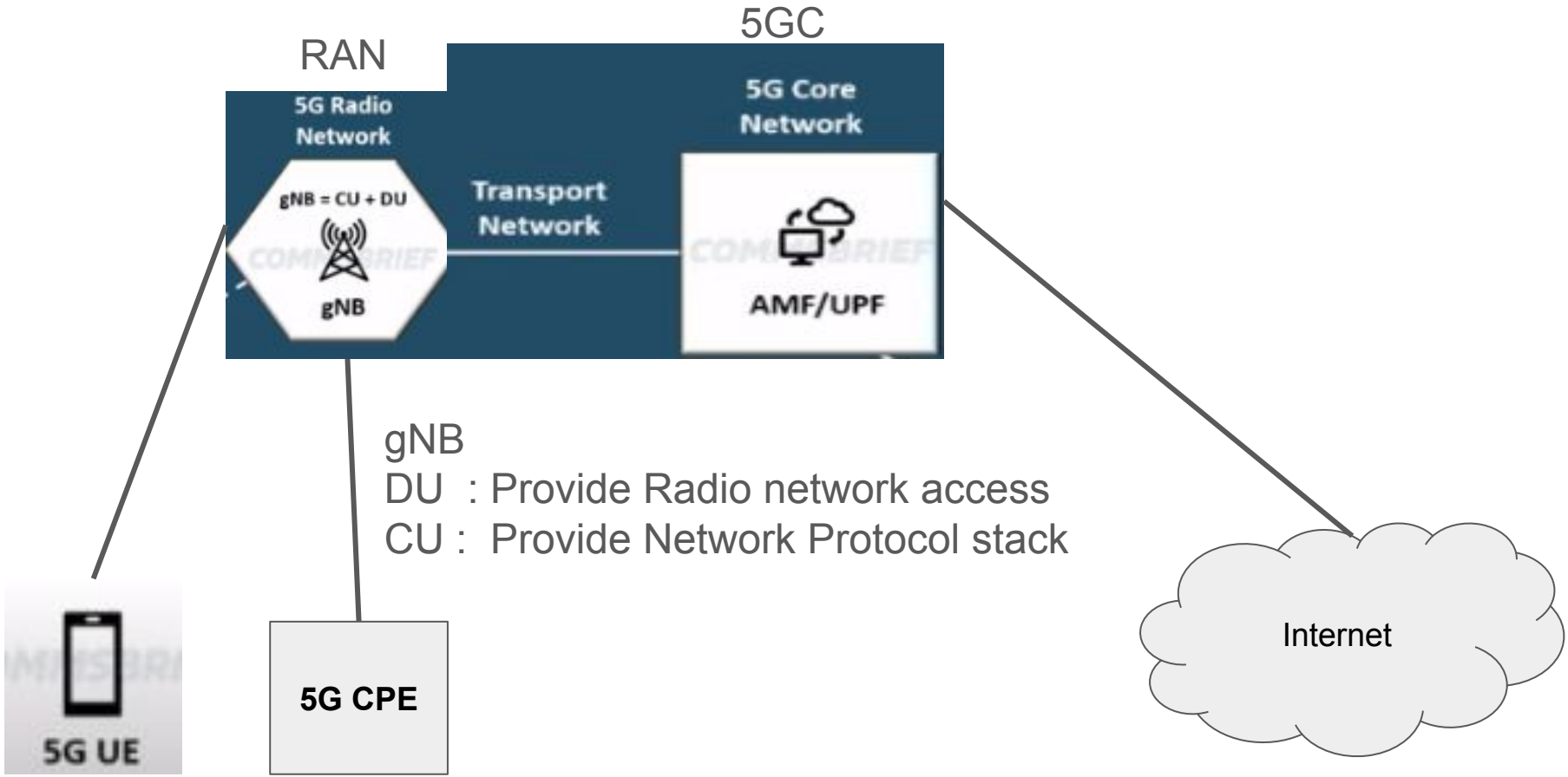

5G Core Network function

1.**User Access and Authentication(authentication):** Relate to the UE connect to the 5G access network

2.**Session Management(Voice,Data,other communication service)**:
Related to UE connection has been created,establishing, maintaining, and releasing communication sessions. This includes voice calls, data transfers, and other communication services.

3.**Mobility Management(roaming)**: The core network handles the switching and roaming of UE as they move.

4.**Network Slicing Support(SDN, NFV)**:
The 5G core network supports network slicing technology, allowing network resources to be **dynamically allocated to meet the specific requirements of different services and applications**.

5.**Edge Computing and Low Latency (Low latency , IoT)**: Keyword: **reducing latency** , especially for applications requiring low latency, such as the Internet of Things (IoT) and augmented reality.

6.**Security and Privacy(Security)**:
The core network is responsible for managing the security and privacy of communications. It employs encryption and authentication technologies to protect data transmission and ensures the appropriate safeguarding of user information.

Reference:
https://ws-proj.moe.edu.tw/Download.ashx?u=LzAwMS9VcGxvYWQvNTc2L3JlbGZpbGUvMTMwOTcvMzk4L2VkOTMzNGY4LTJmOTYtNDc2My05M2NiLTM0Nzg3NGQ2

3. 5G Core Network

- **N1 Interface is based on 3GPP TS 38.413 version 16.2.0 Release 16**
- **N2 Interface is based on 3GPP TS 24.501 version 15.3.0 Release 15**
- **N3 Interface is based on 3GPP TS 29.281 version 15.7.0 Release 15**

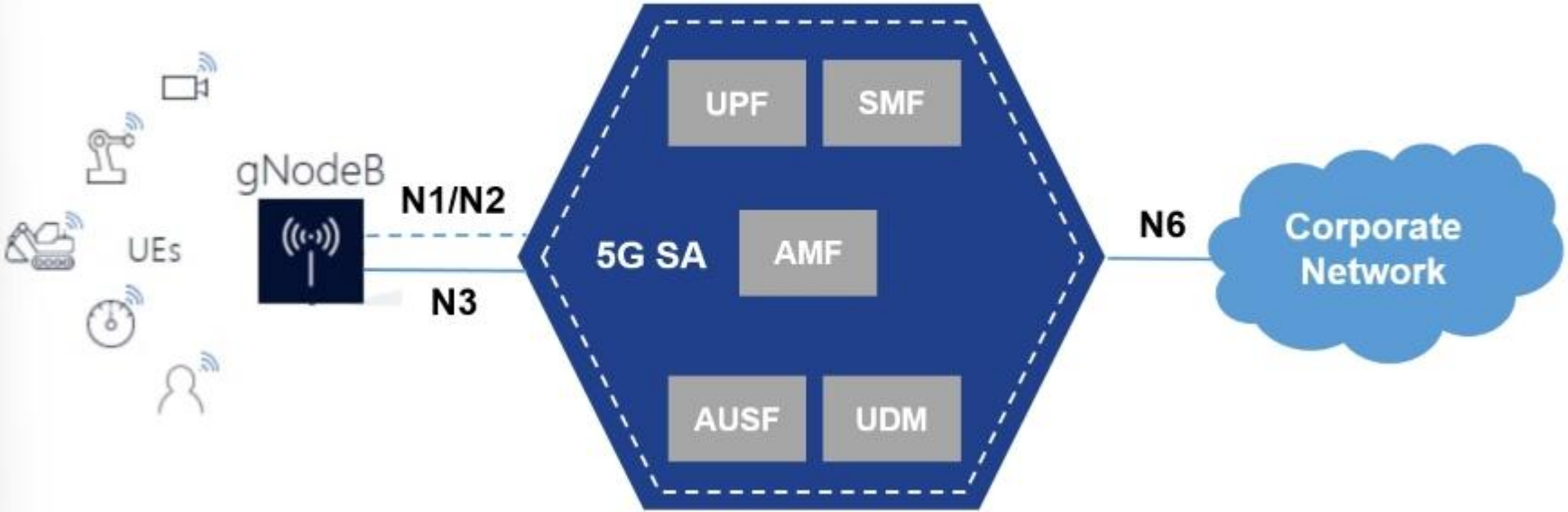

(1)N1 interface is between the **UE** and the AMF (**Accessibility & Mobility Management Function**). The N1 interface is used by the UE for **non-radio signaling** mainly NAS(**Non access stratum**) layer signaling. N1 N2 acts as the interface between gNodeB and AMF.
(2)**N2 Interface (AN(access stratum) <-> AMF) : Paging** ,**Handover**,**UE mobility**,related to PDU Session resource setup

(3)**N3 interface:** Interface between the **RAN (gNB**) and the (initial) **UPF**.(User Plane Function (UPF))

N1 , N2 , N3

(1)**N1** interface is between the **UE** and the AMF (**Accessibility & Mobility Management Function**).
(2)**N2 Interface (AN(access stratum) <-> AMF) : Paging** ,**Handover**,**UE mobility**,related to PDU Session resource setup
(3)**N3 interface:** Interface between the **RAN (gNB**) and the (initial) **UPF**.

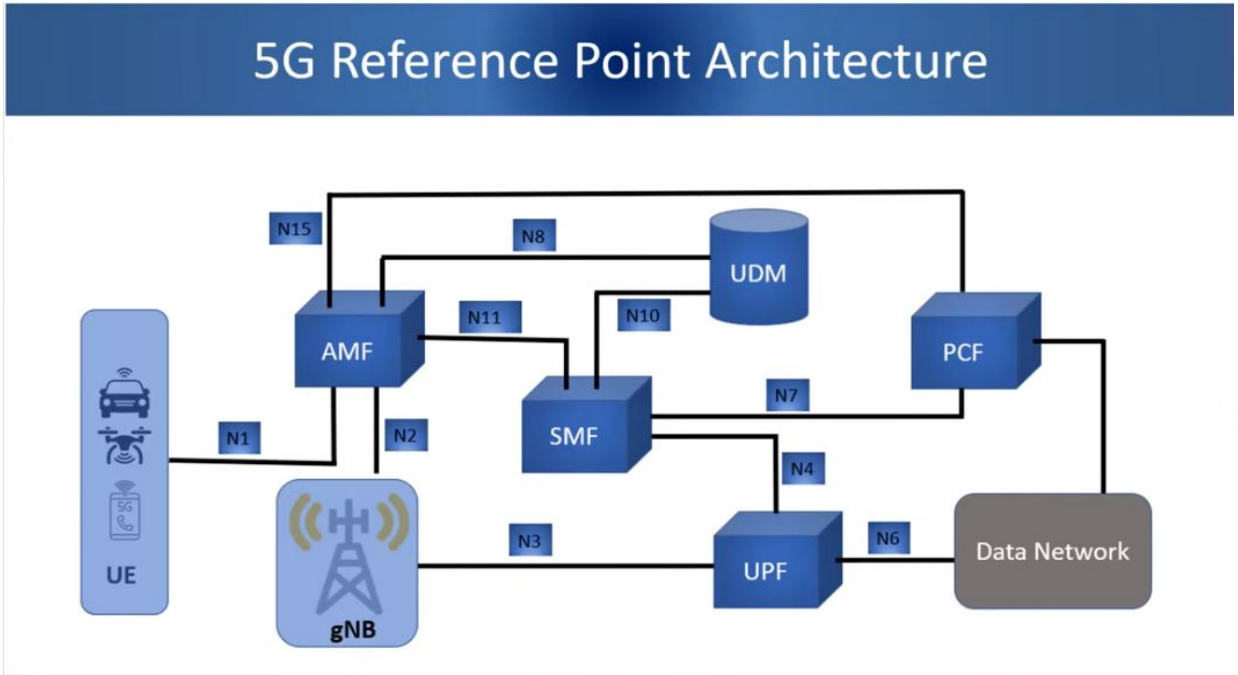

User Plane Function (UPF)
https://techcommunity.microsoft.com/t5/azure-for-operators-blog/what-is-the-5g-user-plane-function-upf/ba-p/3690887
https://www.youtube.com/watch?v=Wj9tw0TGzls

Reference: (1) https://ithelp.ithome.com.tw/articles/10295681
(2) https://www.youtube.com/watch?v=dp_tHjYcmJY
(3) https://ithelp.ithome.com.tw/articles/10294923

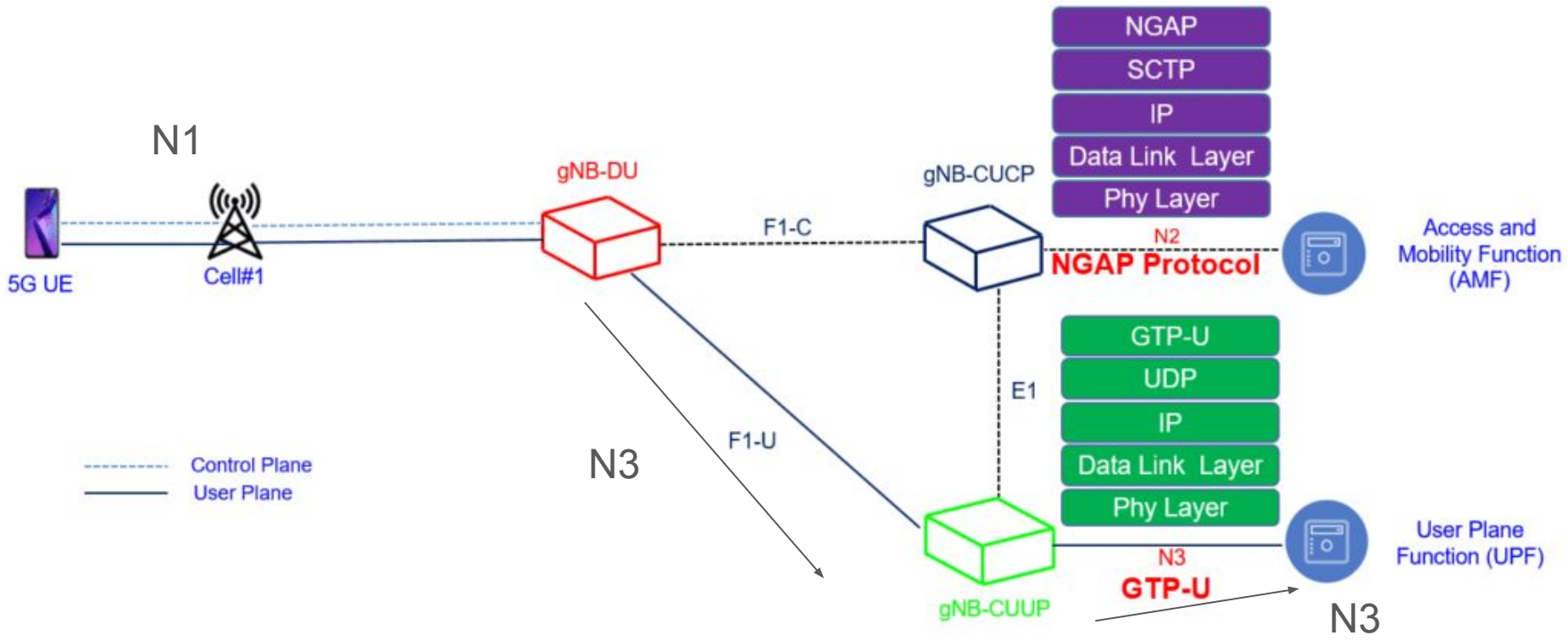

4. 5GC opensource 1 **: Integrated 5G SA FWA**

https://magma.github.io/magma/docs/next/lte/integrated_5g_sa

Prerequisites

Before starting to configure 5G SA setup, first you need to bring up a setup to handle your own/local subscribers. So before configuring Inbound Roaming you need:

- Install Or8cr,
- Install Federatetion Gateway and,
- Install Access Gateway.
- Make sure your setup is able to serve calls with your local subscribers

UE/CPE basic registration Flow

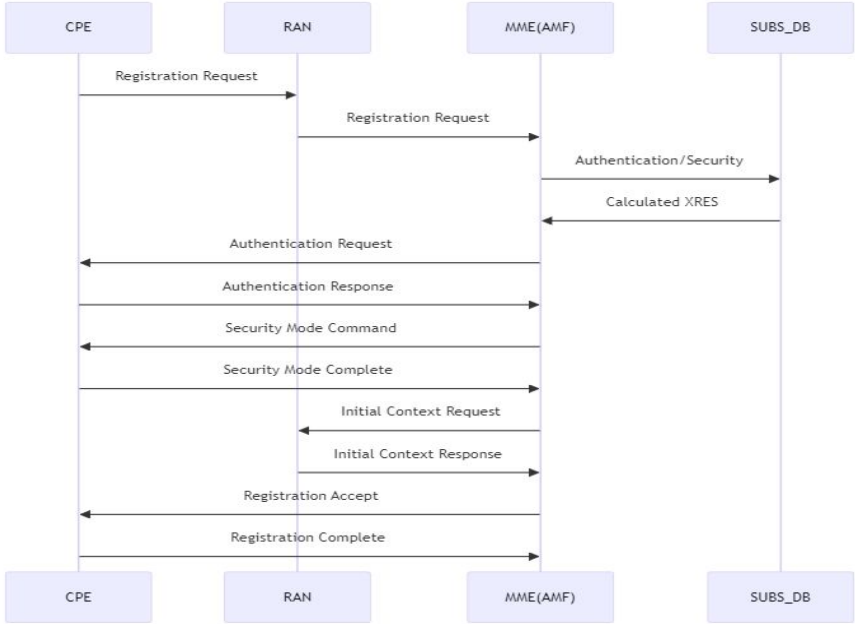

5. 5GC opensource 2 : open5gs and ueransim

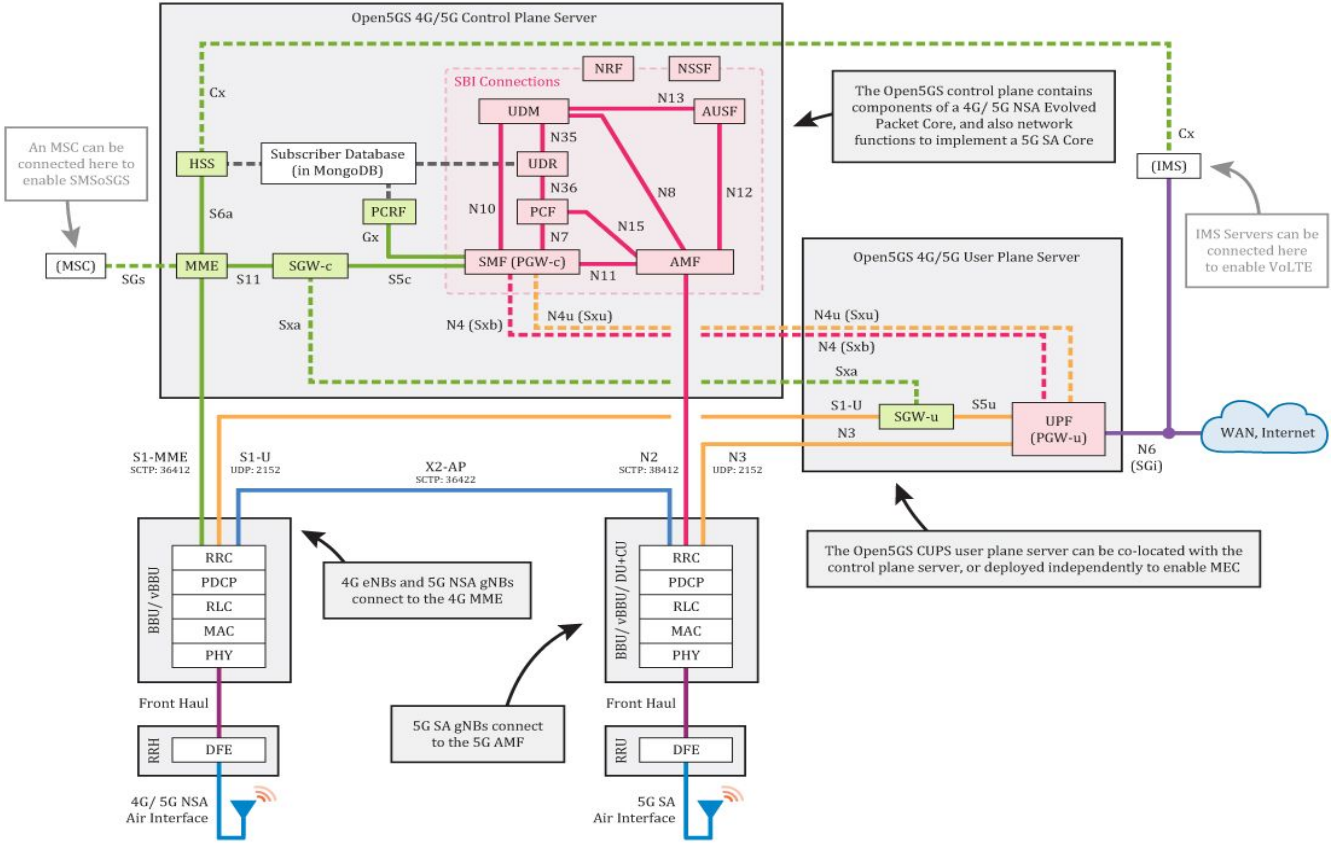

https://nickvsnetworking.com/my-first-5g-core-open5gs-and-ueransim/

https://open5gs.org/open5gs/docs/guide/01-quickstart/

.Test Beds related to 5G UE (User equipment)

Test SIM - PySIM

pySim is a small command-line tool to program(write to) a variety of programmable sim cards.

https://downloads.osmocom.org/docs/pysim/master/html/

https://www.youtube.com/watch?v=xvdLCqSDAMY

. Test Beds related to 5G CoreNetwork (CD-Router)

Potential 5G test setup refer from 4G Test suites

Physical Test Setup

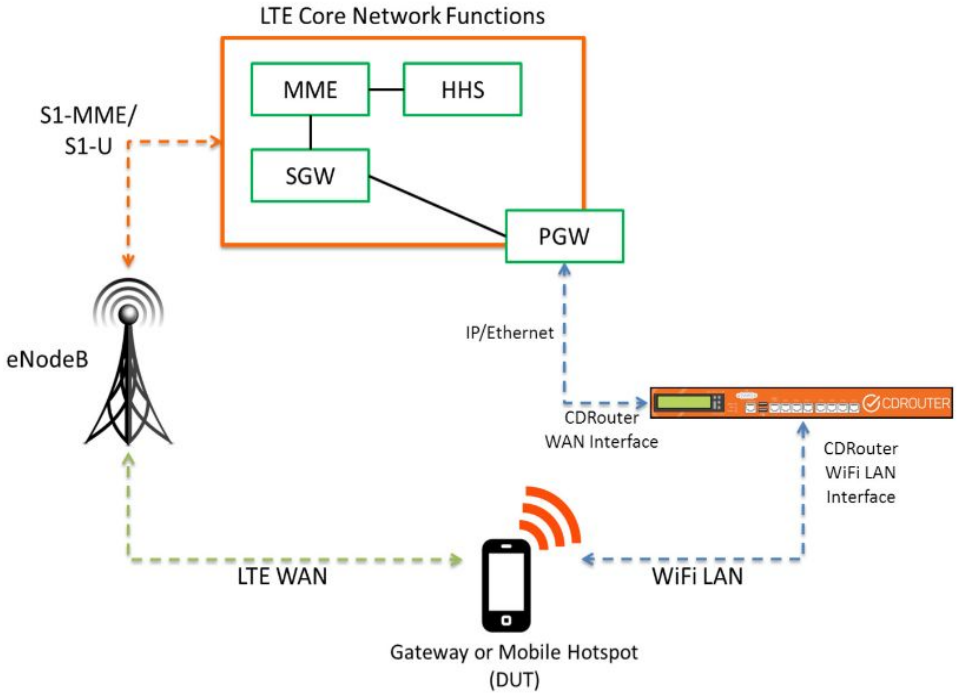

https://www.qacafe.com/resources/2017-04-06-test-setup-lte-gateway-mobile-hotspot/

8. 5G testing reference from AWS

https://docs.aws.amazon.com/zh_tw/whitepapers/latest/cicd_for_5g_networks_on_aws/testing.html

呼叫外部 REST API 的複雜性是使用 AWS Step Functions 建立模型，其會允許標準建構呼叫平行流程、等候結果、基於條件進行分支，並整合 REST API 與 AWS CodePipeline。

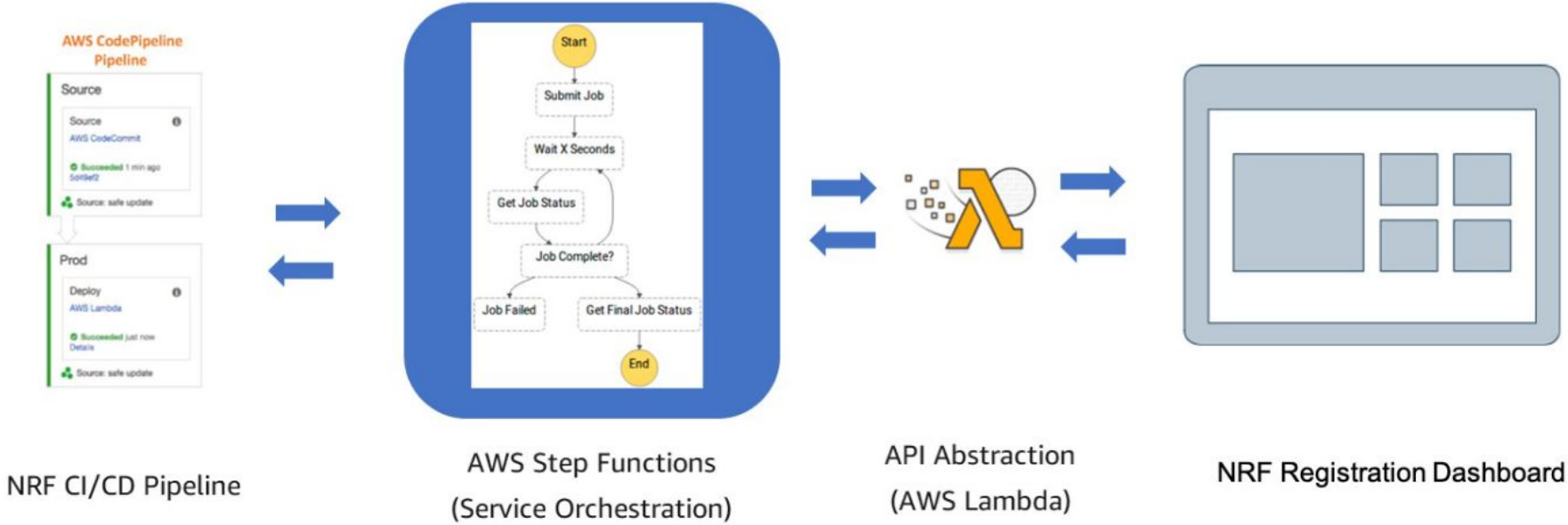

10. Layer 2 Qos 802.1p (DSCP) test reference

Keyword : Vlan user priority

Purpose: The QoS VLAN Priority lets you assign a priority to outbound packets containing the specified VLAN-ID (VID).

How to Test ? example: IXIA
https://www.youtube.com/watch?v=ogqUlxsafUA

https://techlibrary.hpe.com/device_help/ProCurveJ9562A/conf/qualityofservice/qosdiffserve.htm

TOS Value	VLAN Priority	Device Priority
111000 - Network_Control	7	1
110000 - Internetwork_Control	6	1
101000 - Critical_/_Realtime	5	2
100000 - Interactive_1	4	2
011000 - Interactive_2	3	3
010000 - Batch_1	2	3
001000 - Batch_2	1	4
000000 - Best_Effort	0	4
Any DSCP value	0	4

https://www.ibm.com/docs/en/zos/2.3.0?topic=tagging-specific-interface